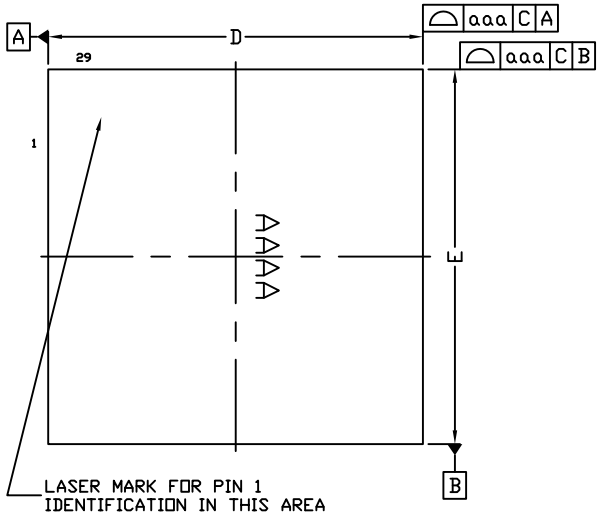

TOP VIEW

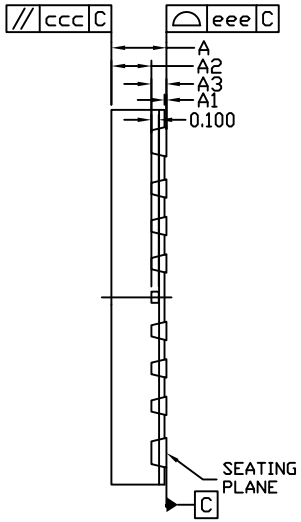

SIDE VIEW

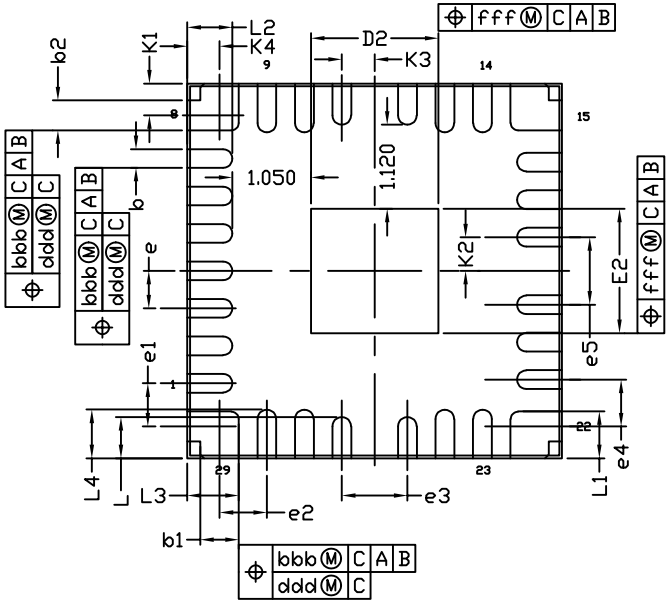

BOTTOM VIEW

NOTES :

1. ALL DIMENSIONS ARE IN MILLIMETERS UNLESS OTHERWISE SPECIFIED.
2. DIMENSIONING & TOLERANCING CONFORM TO ASME Y14.5-2009.
3. COPLANARITY APPLIES TO THE TERMINALS AND ALL OTHER BOTTOM SURFACE METALLIZATION.
4. MARKING SHOWN IS FOR PACKAGE ORIENTATION REFERENCE ONLY.
5. MATERIAL MUST BE COMPLIANT WITH MAXIM SPECIFICATION 10-0131 FOR SUBSTANCE CONTENT, MUST BE Eu ROHS COMPLIANT WITHOUT EXEMPTION AND PB-FREE.
6. ALL DIMENSIONS APPLY TO PbFREE (+) PKG. CODE ONLY.
7. Package code is F295A5FY+1.

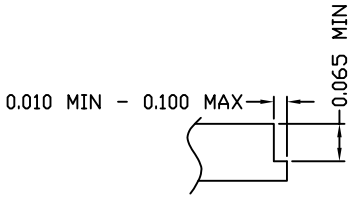

SECTION A-A (1/5)

* CONTROLLING DIMENSION : MM

SYMBOL	MILLIMETER		
	MIN.	NOM.	MAX.
A	0.700	0.750	0.800
A1	0.000	—	0.050
A2	—	0.530	0.580
A3		0.203	REF.
b	0.180	0.250	0.300
b1	0.463	0.513	0.563
b2	0.350	0.400	0.450
D		5	BSC
D2	1.600	1.700	1.800
E		5	BSC
E2	1.560	1.660	1.760
L	0.450	0.550	0.650
L1	0.525	0.625	0.725
L2	0.500	0.600	0.700
L3	0.588	0.688	0.788
L4	0.550	0.650	0.750
e		0.500	BSC
e1		0.575	BSC
e2		0.631	BSC
e3		0.875	BSC
e4		0.625	BSC
e5		0.900	BSC
K1		0.425	BSC
K2		0.450	BSC
K3		0.438	BSC
K4		0.431	BSC
TOLERANCES OF FORM AND POSITION			
aaa	0.150		
bbb	0.100		
ccc	0.100		
ddd	0.050		
eee	0.080		
fff	0.100		

ANALOG DEVICES

TITLE:
PACKAGE OUTLINE, 29L, FC2QFN PKG., 5.0X5.0X0.75mm

APPROVAL	DOCUMENT CONTROL NO.	REV.	
ZHEN LI	21-100602	C	1/1

—DRAWING NOT TO SCALE—