DOCUMENT TYPE:	**POD**
DOCUMENT ID #:	**21-100787**
REVISION:	**D-000**
DOCUMENT TITLE:	**PACKAGE OUTLINE, 10L, FC2QFN PKG., 2.00**
EFFECTIVE DATE:	**01/26/2025**
EXPIRATION DATE:	
CHANGE NUMBER:	**1223511**
ORIGINATOR:	**Aurelio Giron Jr.**

REASON FOR CHANGE:
Add labels for pseudo pins.

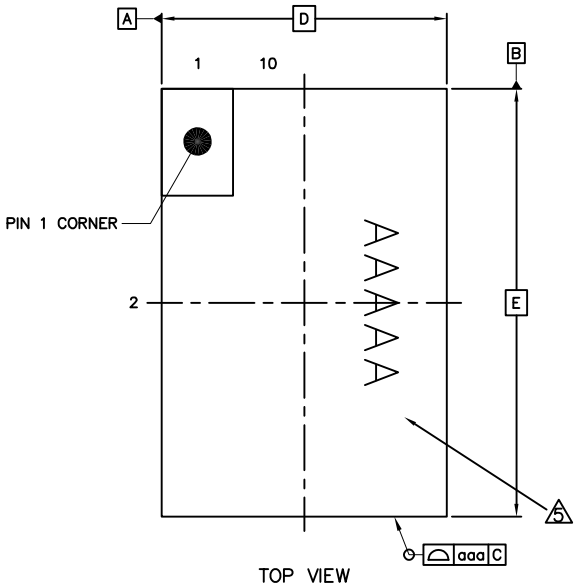

TOP VIEW

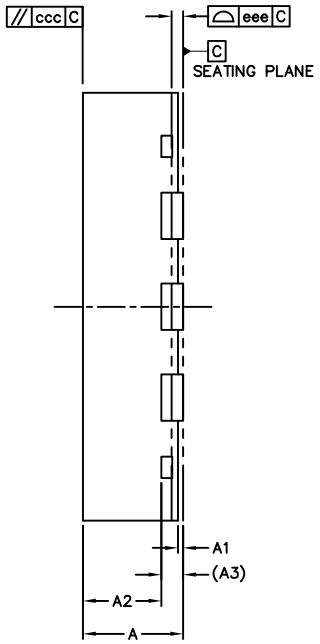

SIDE VIEW

	SYMBOL	MIN.	NOR.	MAX.
TOTAL THICKNESS	A	0.65	0.7	0.75
STAND OFF	A1	0	0.035	0.05
MOLD THICKNESS	A2	---	0.55	---
L/F THICKNESS	A3	0.152		REF
LEAD WIDTH	b	0.15	0.2	0.25
	b1	1.69	1.735	1.785
BODY SIZE	D	2		BSC
	E	3		BSC
LEAD PITCH	e	0.5		BSC
	e1	0.596		BSC
LEAD LENGTH	L	0.225	0.325	0.425
	L1	0.3	0.4	0.5
	L2	0.35	0.4	0.45
PACKAGE EDGE TOLERANCE	aaa	0.1		
LEAD OFFSET	bbb	0.1		
	ddd	0.05		
MOLD FLATNESS	ccc	0.1		
COPLANARITY	eee	0.08		

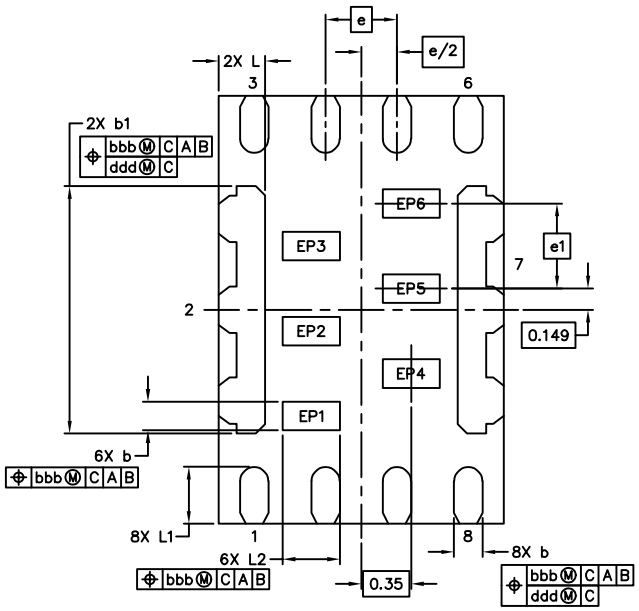

BOTTOM VIEW

NOTES:

1. ALL DIMENSIONS ARE IN MILLIMETERS UNLESS OTHERWISE SPECIFIED.
2. DIMENSIONING & TOLERANCING CONFORM TO ASME Y14.5M–1994.
3. THE TERMINAL #1 IDENTIFIER AND TERMINAL NUMBERING CONVENTION SHALL CONFORM TO JESD 95–1 SPP–012. DETAILS OF TERMINAL #1 IDENTIFIER ARE OPTIONAL, BUT MUST BE LOCATED WITHIN THE ZONE INDICATED. THE TERMINAL #1 IDENTIFIER MAY BE EITHER A MOLD OR MARKED FEATURE.
4. COPLANARITY APPLIES TO TERMINALS AND ALL OTHER BOTTOM SURFACE METALLIZATIONS.
5. MARKING ALONG LONG EDGE OF PACKAGE TO ACCOMODATE LONG PART NUMBERS.
6. MATERIAL MUST BE COMPLIANT WITH MAXIM SPECIFICATION 10–0131 FOR SUBSTANCE CONTENT, MUST BE Eu ROHS COMPLIANT WITHOUT EXEMPTION AND PB–FREE.
7. ALL DIMENSIONS APPLY TO PbFREE (+) PKG. CODES.
8. PKG CODE: F1023F+1

ANALOG DEVICES

TITLE:
PACKAGE OUTLINE, 10L, FC2QFN PKG., 2.00 x 3.00 x 0.70 MM

APPROVAL	DOCUMENT CONTROL NO.	REV.	
HAN CHIEN	21–100787	D	1/1

–DRAWING NOT TO SCALE–

REVISION HISTORY

REV	CHANGES MADE	DATE	INIT.
A	CN 1216078. INITIAL RELEASE	09/23/24	AG
B	CN 1217997. Change package code from F102A3F+1 to F1023F+1	09/01/24	AG
C	CN 1223225. Change the pin numbering.	01/17/25	AG
D	CN 1223511 Add labels for pseudo pins.	01/26/25	AG